FABER technica lighting

Ph. D. Eng. Marco Frascarolo

"Light for **DESIGN**, **LANDSCAPE** for and inside **ART**"

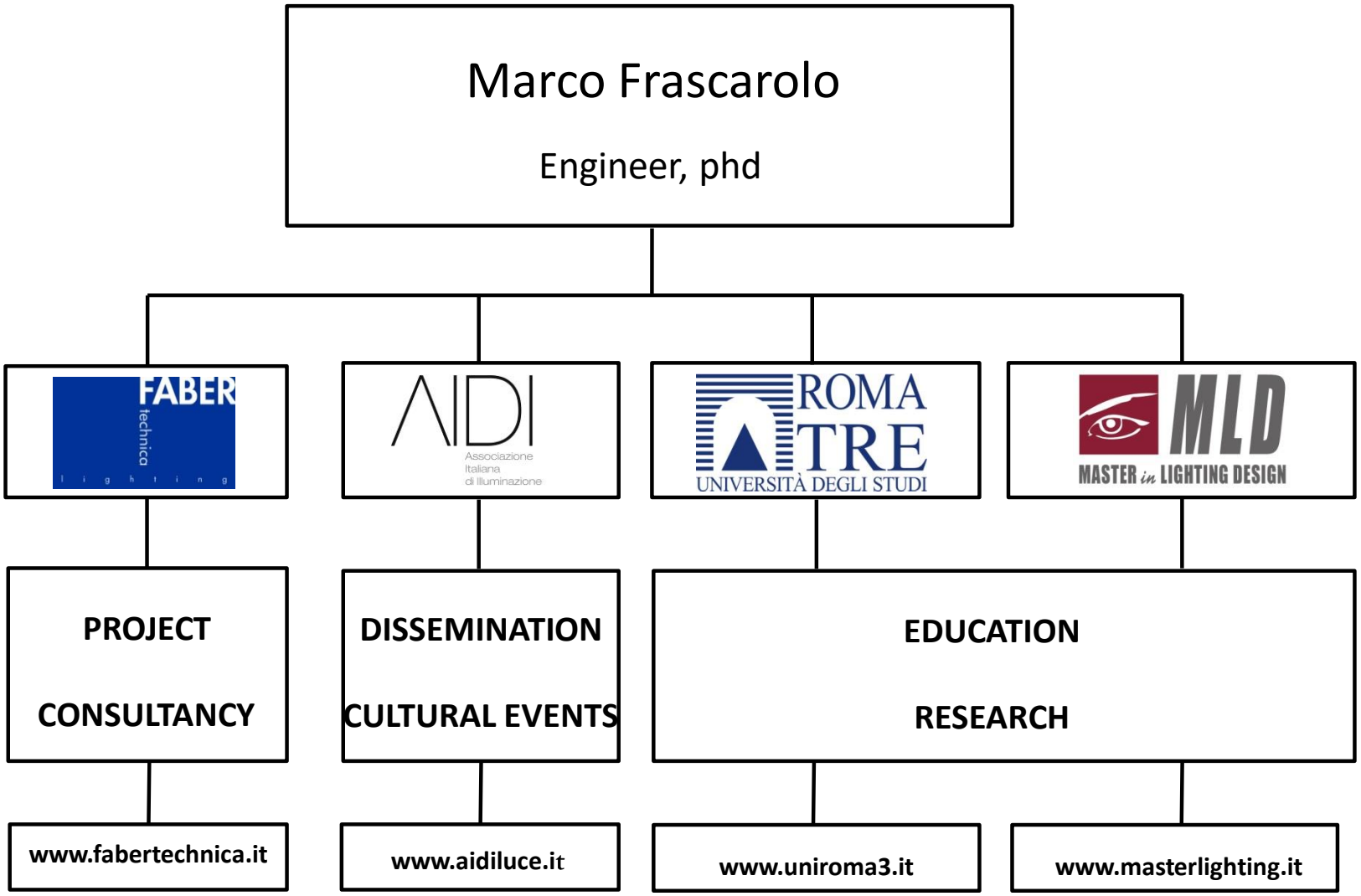
Marco Frascarolo
Engineer, phd
FABER technica lighting
AIDI Associazione Italiana di Illuminazione
ROMA TRE UNIVERSITÀ DEGLI STUDI
MLD MASTER in LIGHTING DESIGN
PROJECT
CONSULTANCY
DISSEMINATION
CULTURAL EVENTS
EDUCATION
RESEARCH
www.fabertechnica.it
www.aidiluce.it
www.uniroma3.it
www.masterlighting.it

Use of LIGHT in/ for different context:

Light for ART:

1. New Lighting System for the Sistine Chapel.
   High tecnologies & Custom Solutions
2. Lighting Project of the Basilica of St. Francesco d'Assisi
   High Technologies & Italian Handcraft

Light for DESIGN, LANDSCAPE for and inside ART :

3. Project for **"Casa Italia"** Rio 2015
   Light and Design, Light and Landscape, Light inside art, Light and Handcraft

NEW LIGHTING SYSTEM FOR THE SISTINE CHAPEL

High Tecnologies & Custom Solutions

International research-to- practice. Conference LIGHTING DESIGN 2016. St. Petersburg , 6 October 2016

Client :

Vatican Museums, with Governorate of Vatican City State

Object :

Detailed investigation on existing lighting system, design and realization of the new lighting system for the Sistine Chapel

Project team:

LED4ART is a consortium created for the project with a financial support of the

European Union:

- **OSRAM GmbH, Germany and OSRAM Italy**: Project Management, lighting technologies development, lighting management systems; coordinated by M.Boulouednine
- **University of Pannonia, Hungary**: Light measurement, colour quality metrics, optimization of the distribution in the spectrum; coordinated by Professor J. Schanda
- **Catalonia Institute for Energy Research (IREC), Spain**: Energy Audit, CO2 Footprint, dissemination and WEB page, coordinated by Josep Carreras;
- **FABERtechnica, Italy**: Lighting Design, survey of the status quo, study on the integration of natural lighting/artificial lighting, coordinated by Marco Frascarolo*

MICHELANGELO BUONARROTI

Sistine Chapel 'Frontal view' with old lighting system on the left with new lighting system on the right

© Photos from magazine «Luce», n°310, Dec 2014

MICHELANGELO BUONARROTI

Sistine Chapel 'Sibilla Delfica' with old lighting system on the left with new lighting system on the right

© Photos from magazine «Luce», n°310, Dec 2014

Antonio Paolucci

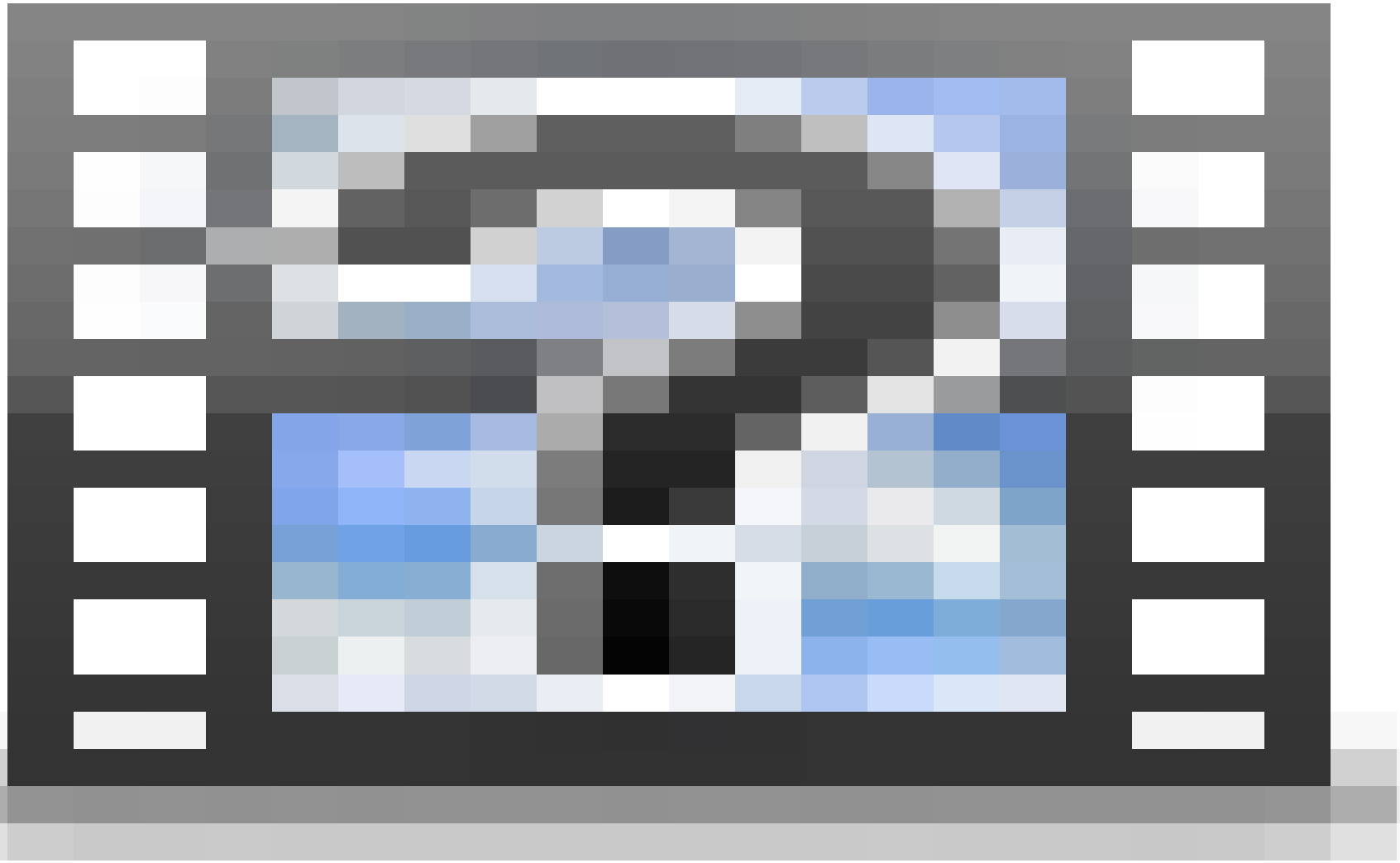

OBJECTIVES :

- **enhancement** of the architectural space through a careful **balance of luminance**
- **high colour quality** capable of enhancing every fresco's detail
- **low impact** of the luminances from all points of view
- maximum attention to the risk profiles for the **conservation**
- **high flexibility** in flux regulation for different scenes
- **saving** in energy consumption and maintenance

Marco Frascarolo

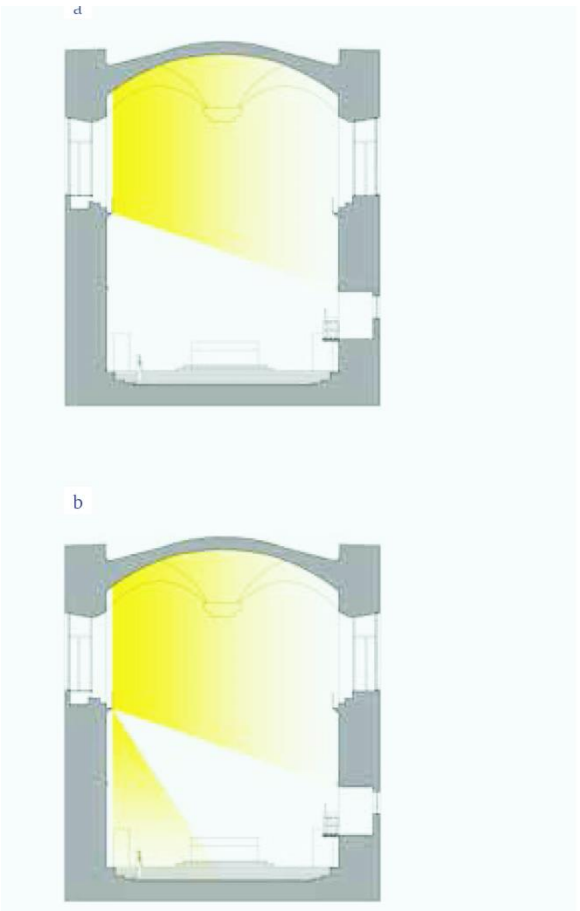

Schematic cross-section of the museum setting (a) and the gala setting (b)

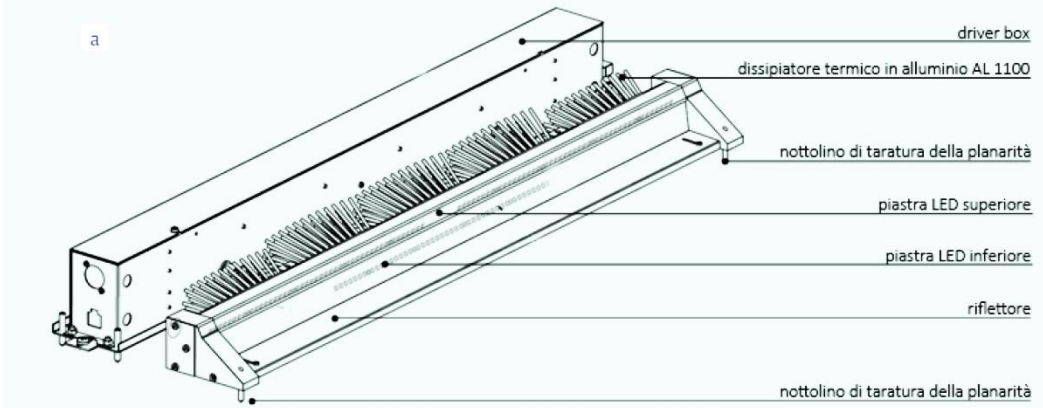

Corpo illuminante V400 per Volta e Quattrocentisti: schema costruttivo assonometrico (a) e immagine fotografica (b)
© OSRAM

V400 lighting system for the Vault and the Quattrocentisti: schematic composition (a) and device (b).

V400 lighting system for the Vault and the Quattrocentisti: schematic composition (a) and device (b)
It is characterized by very compact dimensions: 800 mm in lenght , with a heat sink of 100 mm in depth

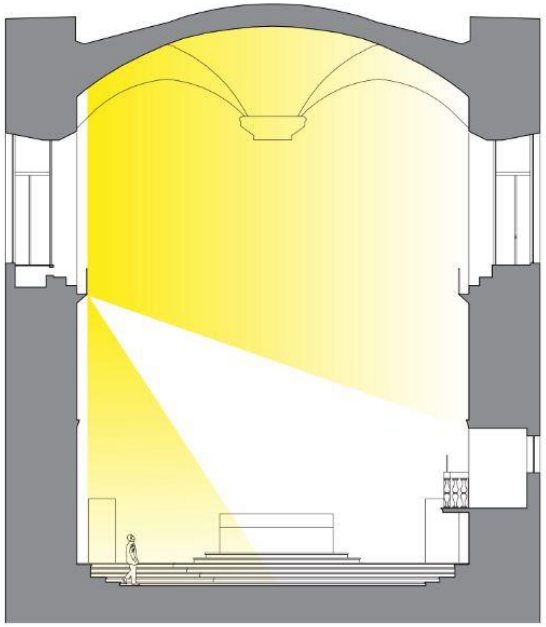

Illustrative diagram of the illuminance levels for the Vault and vertical walls.
For the frescoes, the projects's average value of illuminance was set at 60 lux.

Assonometria che rappresenta l'apparecchio per l'illumina-zione di Gala tra la posizione di parcheggio e la posizione operativa. © OSRAM

Axonometry representing Gala lighting device between its rest position and working Position. © OSRAM

GALA LIGHTING DEVICE: it is usually in rest position, completely out of visitors' sight.

If required, the **single unit** is moved by a **low-powered** and **very silent** electric motor that brings it in its final working position, with its light emission axis directed towards the floor.

The system's task is not to increase the lighting of the Sistin Chapel, but to light it in a manner fully dedicated to functions that are other than museal.

Carlo Bogani

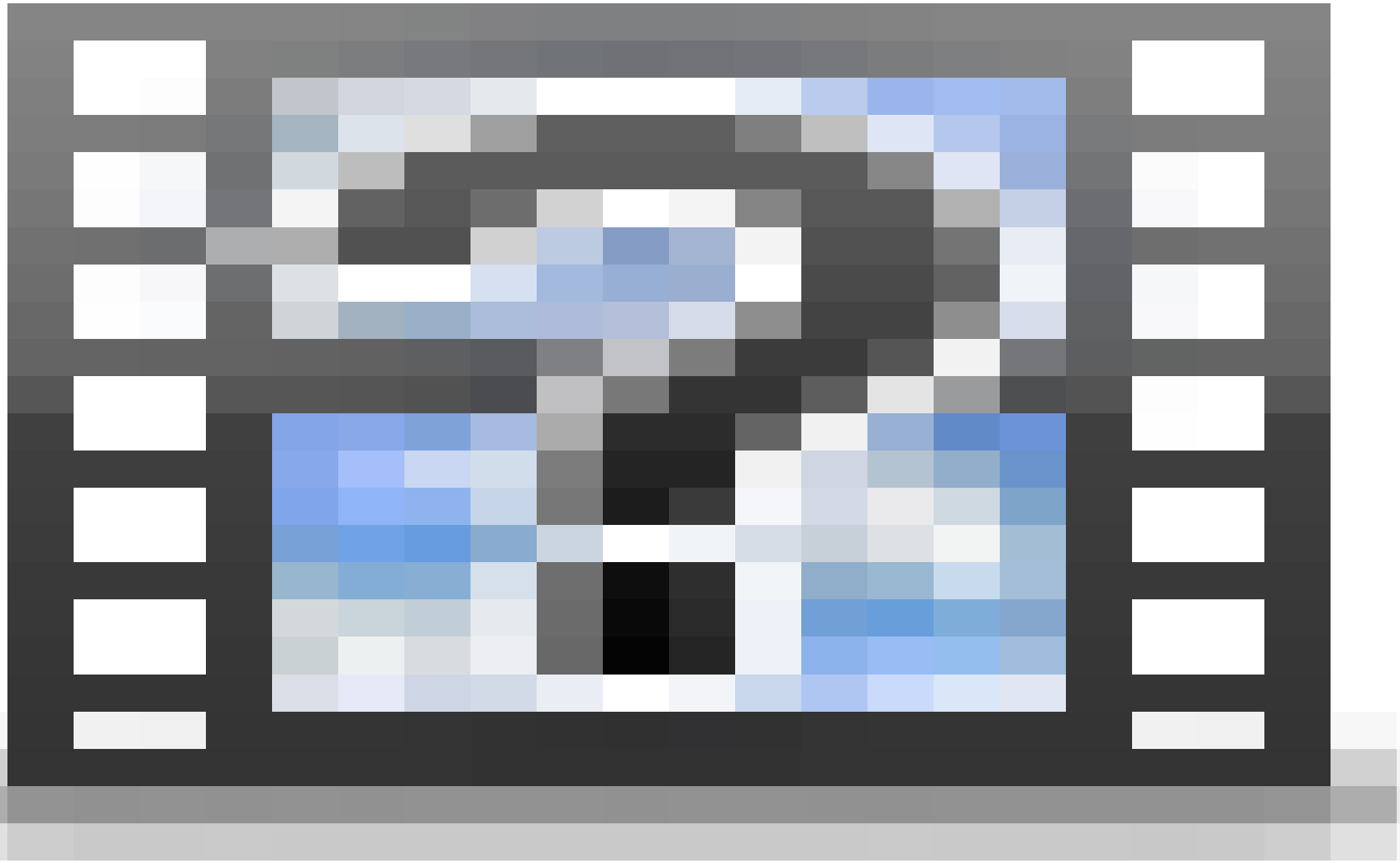

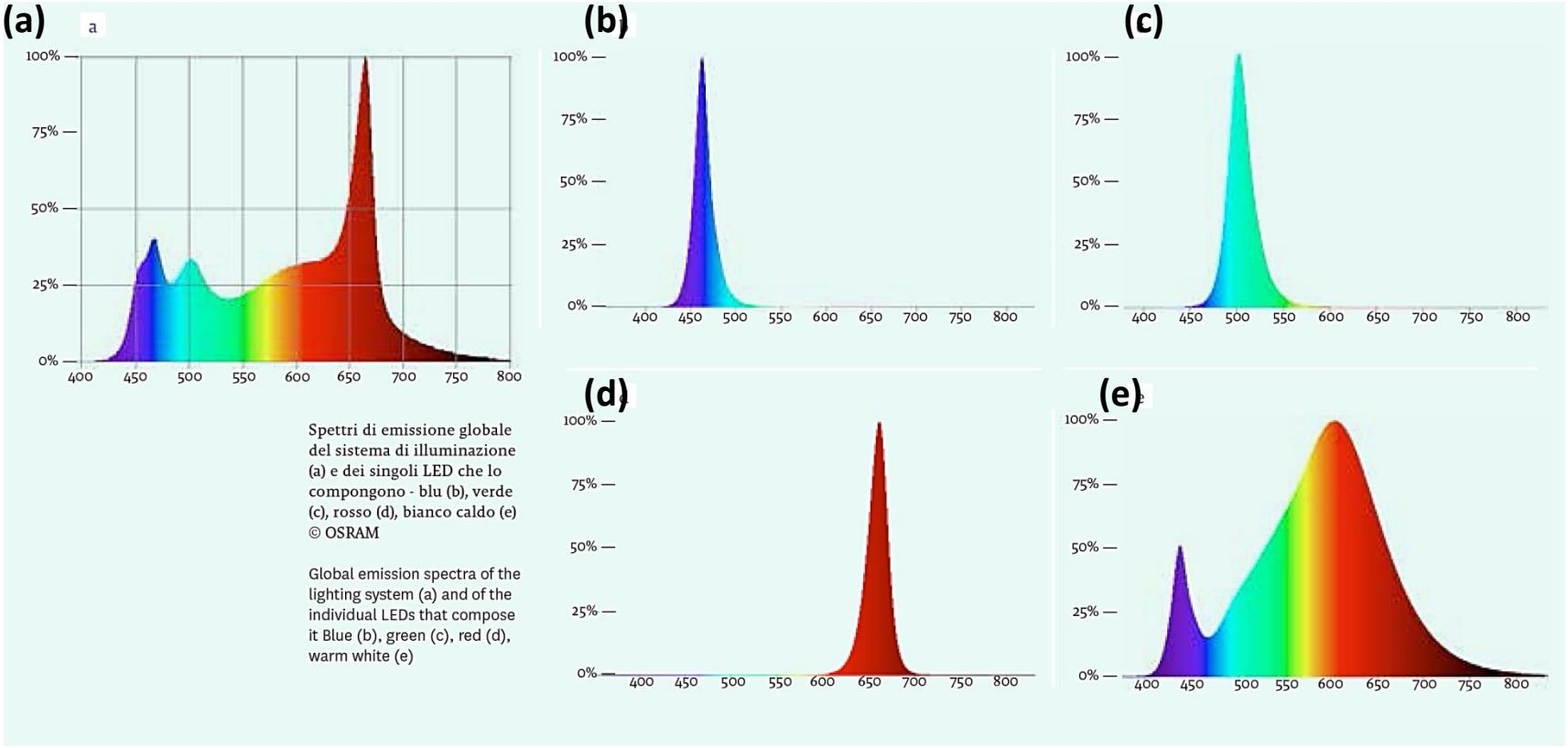

Spettri di emissione globale del sistema di illuminazione (a) e dei singoli LED che lo compongono - blu (b), verde (c), rosso (d), bianco caldo (e) © OSRAM

Global emission spectra of the lighting system (a) and of the individual LEDs that compose it Blue (b), green (c), red (d), warm white (e)

Global emission spectra of the lighting system **(a)**, and of the individual LEDs that compose it Blue **(b)**, green **(c)**, red **(d)**, warm white **(e)**.

The chosen COLOUR TEMPERATURE is equal to 3500 K and the optimum spectrum was obtained by the superimposition of a **white LED** spectrum and a selection of **RGB spectra**.

Ulderico Santamaria

Opening Ceremony

LIGHTING PROJECT FOR ST. FRANCESCO D'ASSISI BASILICA

High Technology
&
Italian Handcraft

International research-to- practice. Conference LIGHTING DESIGN 2016. St. Petersburg , 6 October 2016

OBJECTIVES :

Enhancement and **conservation** of the artistic heritage

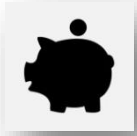

Energy saving

Visual comfort

Optimization of maintenance

Respect for the **enviroment**

Flexibility of the system

THE UPPER BASILICA

High Technology
&
Italian Handcraft

The Upper Basilica – ANTE OPERAM

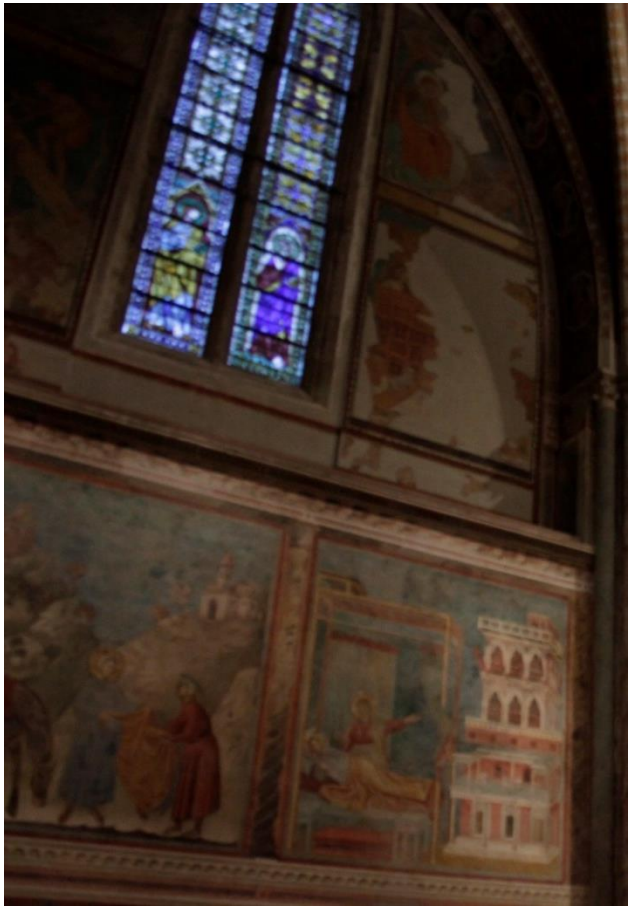

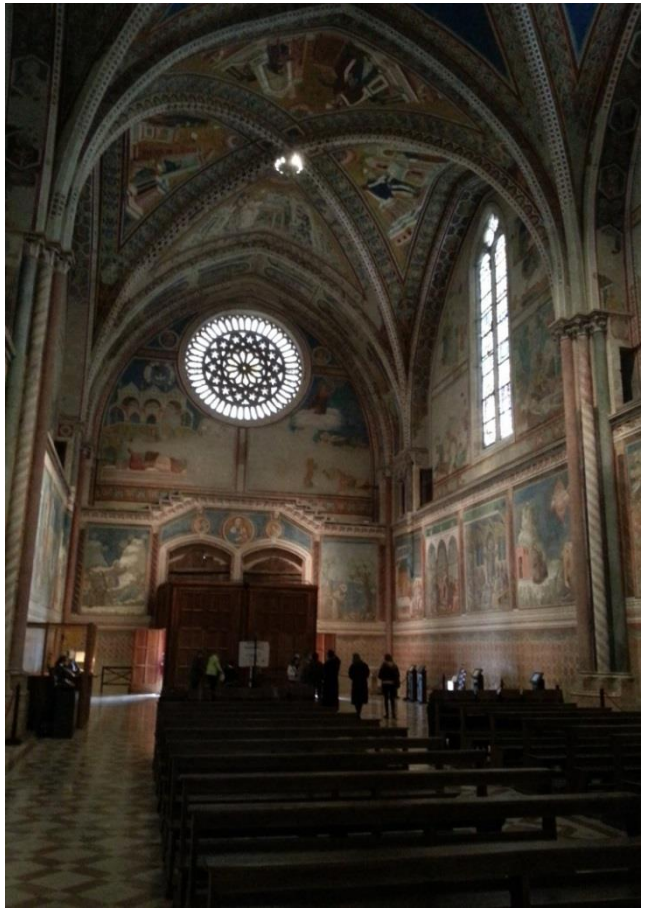

Critical Issues:

- Lack of uniformity on frescoed surface.
- Illuminance not adequate to visual tasks.
- Color heterogeneity of the sources.
- Frescoes on the vaults not valued.
- High level of glare.
- High energy consumption
- Low duration of sources and consequent high frequency of lamp change.

Objectives of the new lighting system

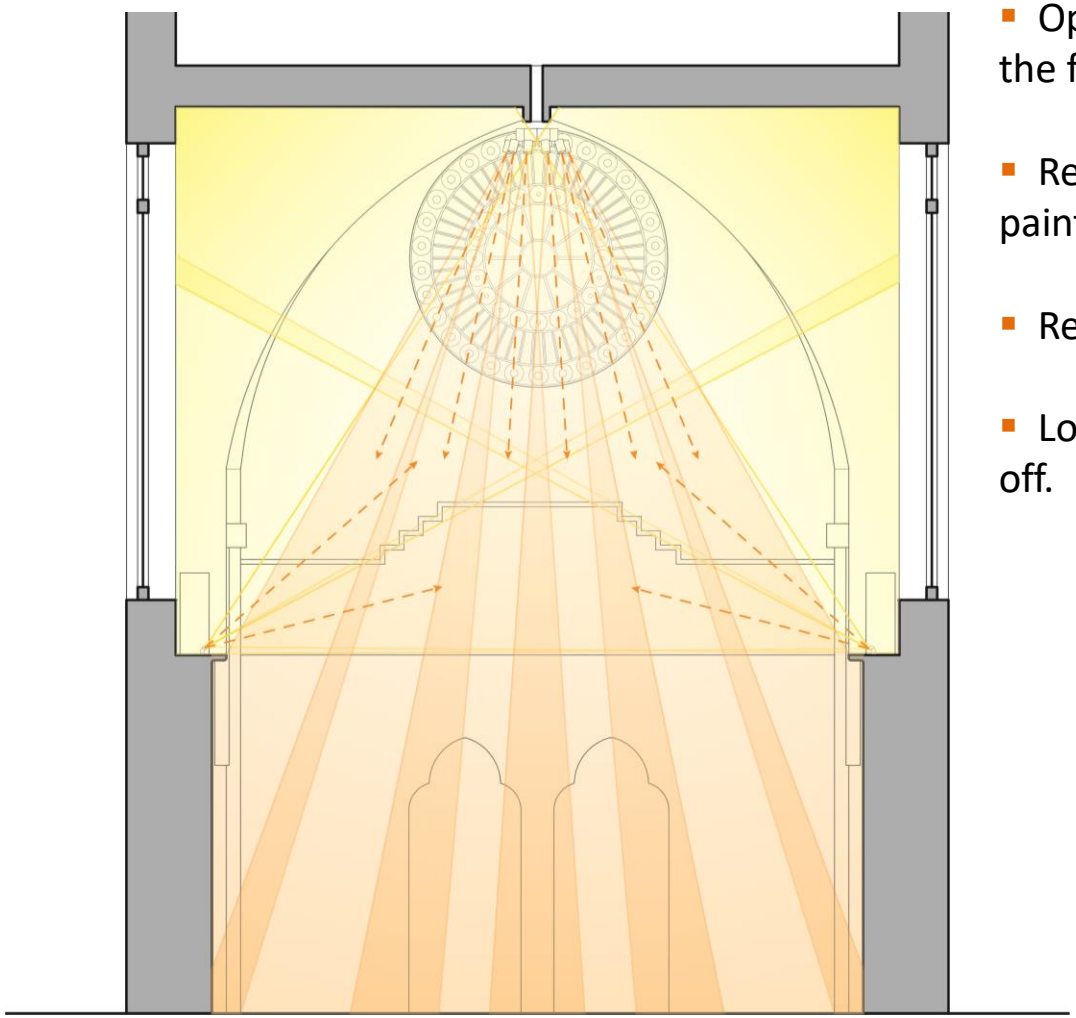

- Optimization of the distribution of the light on the frescoed.
- Reduction of the risk of degradation of the painted surfaces.
- Reducing the risk of glare.
- Low visual impact of equipment, also switched off.

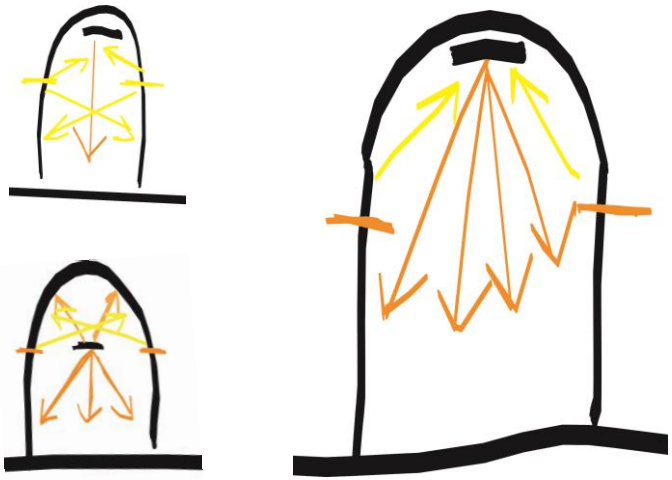

New lighting system: lighting fixtures placement

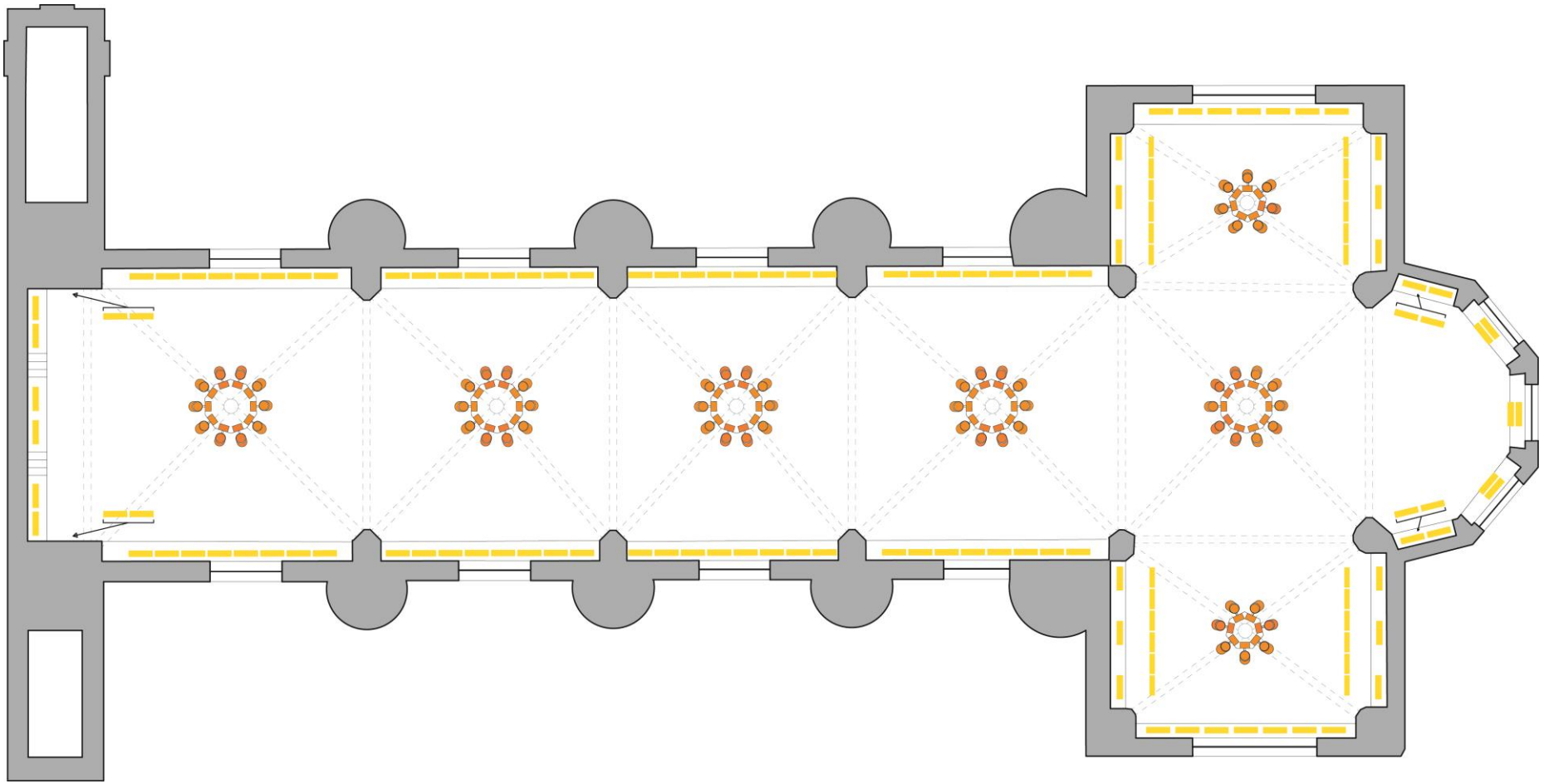

New lightning system: Chandelier type configuration

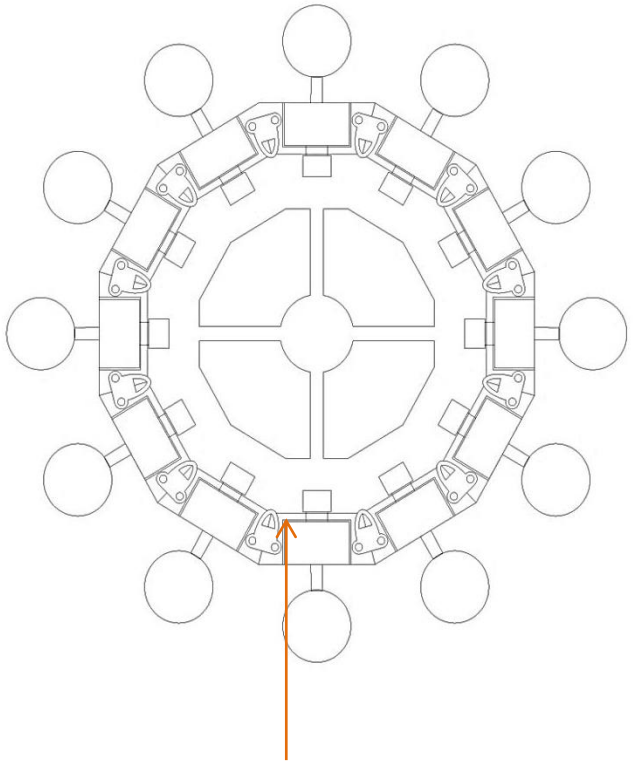

HOUSING FOR
POWER SUPPLIES

LED DEVICE

POWER 75 W
BEAM 24°

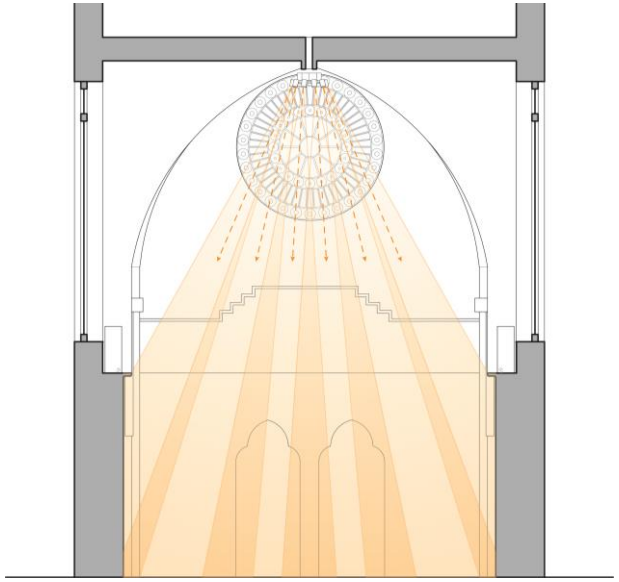

The **final color** of the iron structure and the equipment will be defined toghether with the conservative to **minimize the visibility** background.

New lightning system: Chandelier type configuration

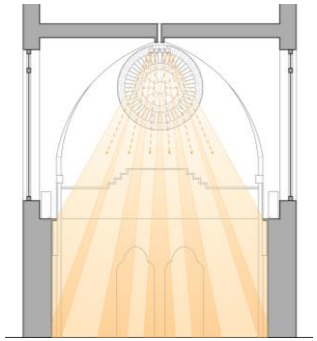

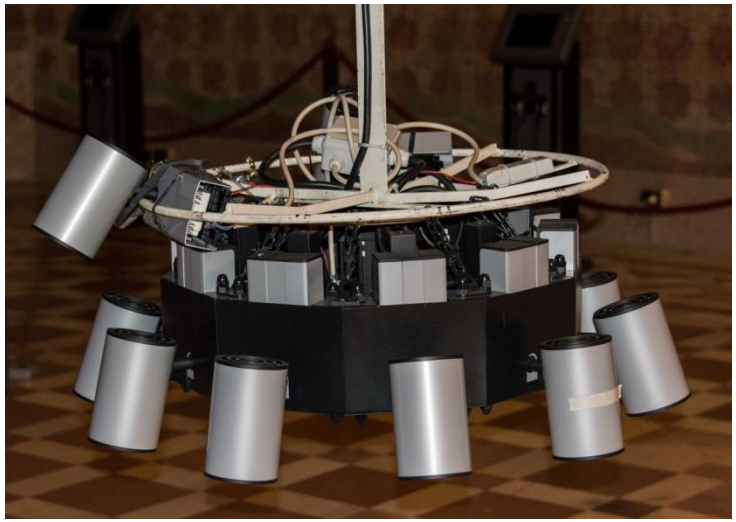

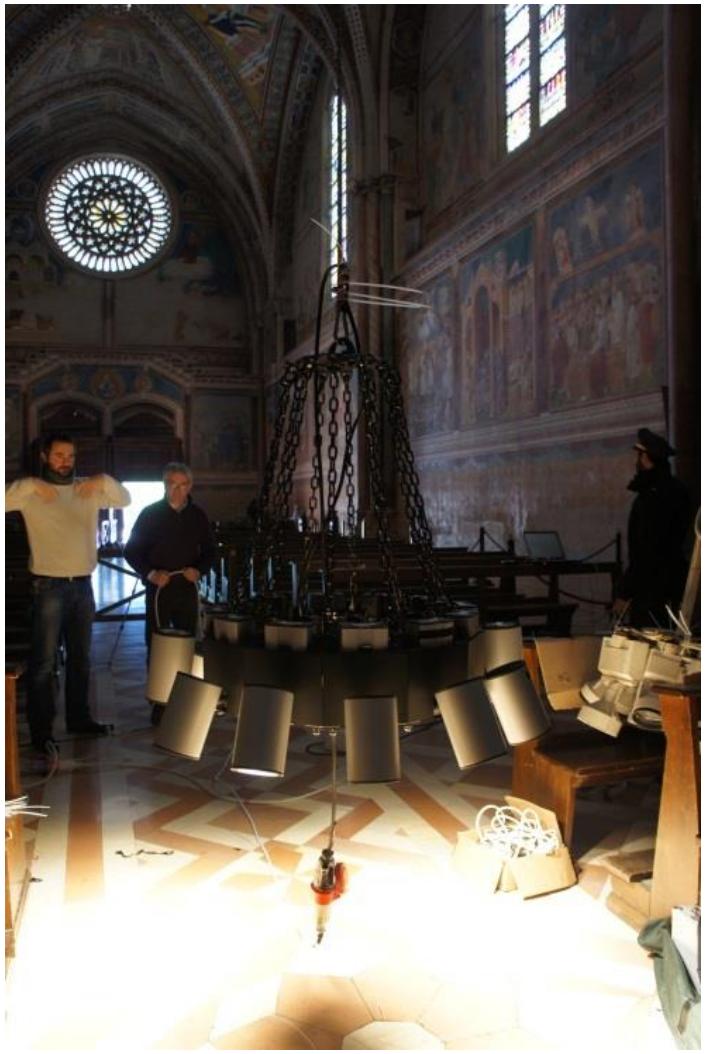

New lightning system: Chandelier type configuration

New lightning system: Vault

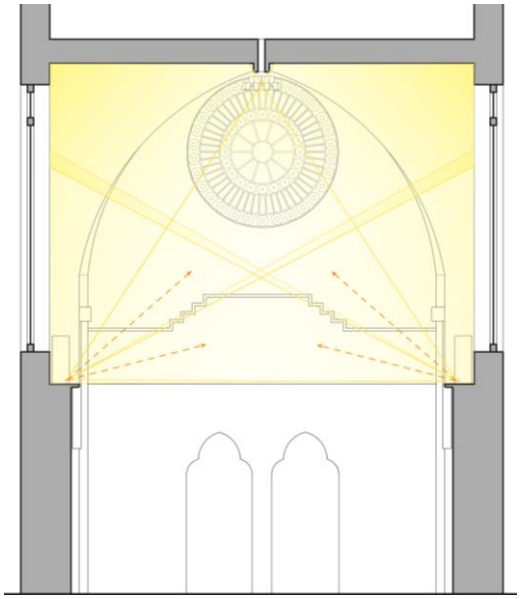

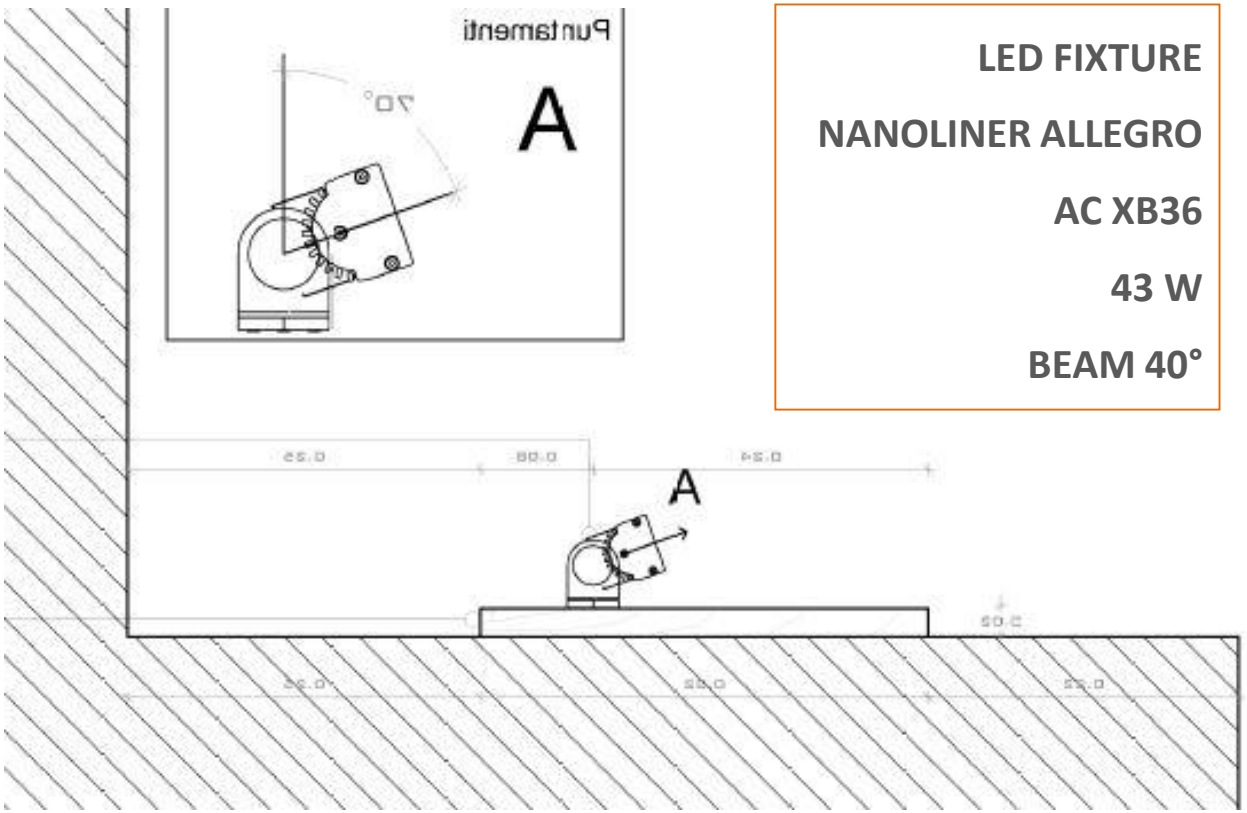

LED FIXTURE

NANOLINER ALLEGRO

AC XB36

43 W

BEAM 40°

New lightning system: Vault

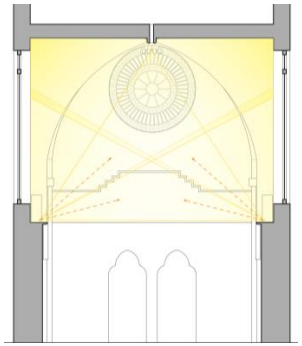

New vault lightning system: assembling phases.

New vault lightning system.

New vault lightning system: lighting measurement.

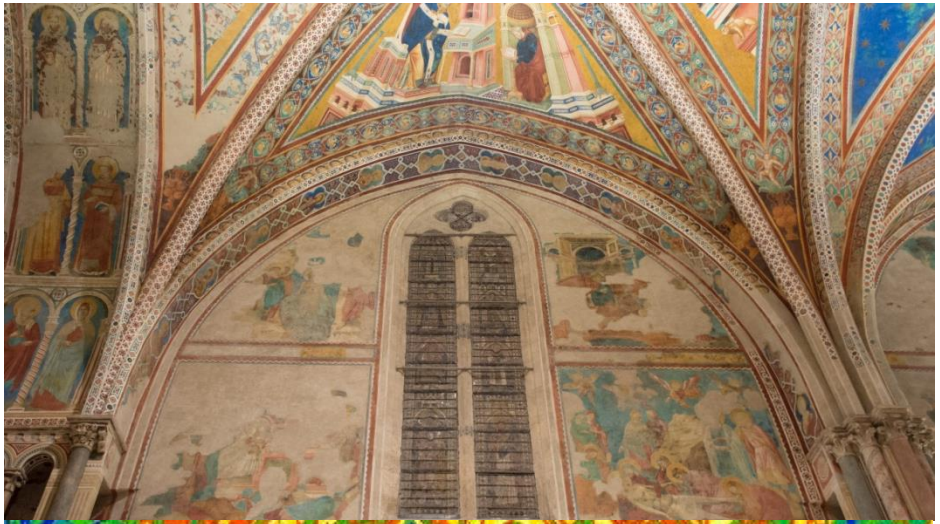

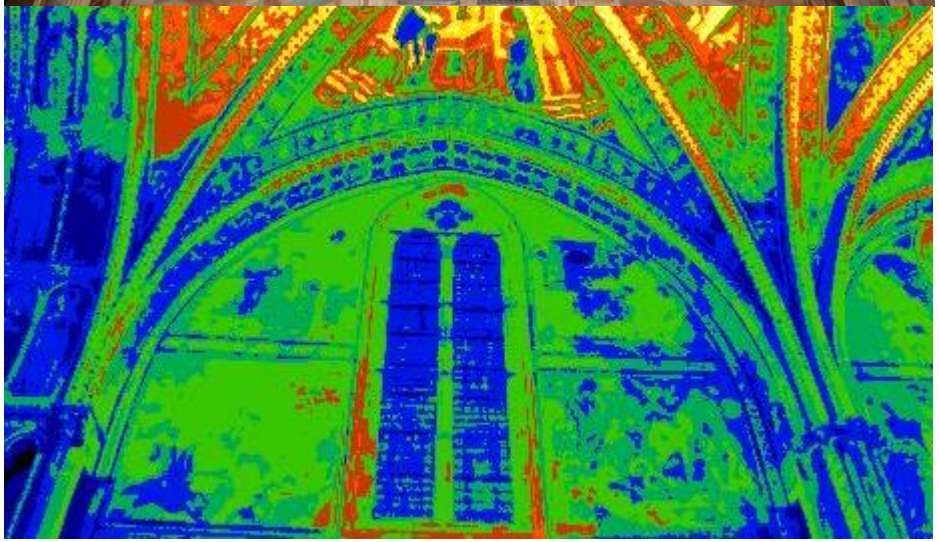

New vault lightning system: lighting measurement.

THE LOWER BASILICA

High Technology
&
Italian Handcraft

The Lower Basilica – ANTE OPERAM

Critical Issues:

- Lack of uniformity on frescoed surface.
- Illuminance not adequate to visual tasks.
- Color heterogeneity of the sources.
- Frescoes on the vaults not valued.
- High level of glare.
- High energy consumption
- Low duration of sources and consequent high frequency of lamp change.

Objectives of the new lighting system

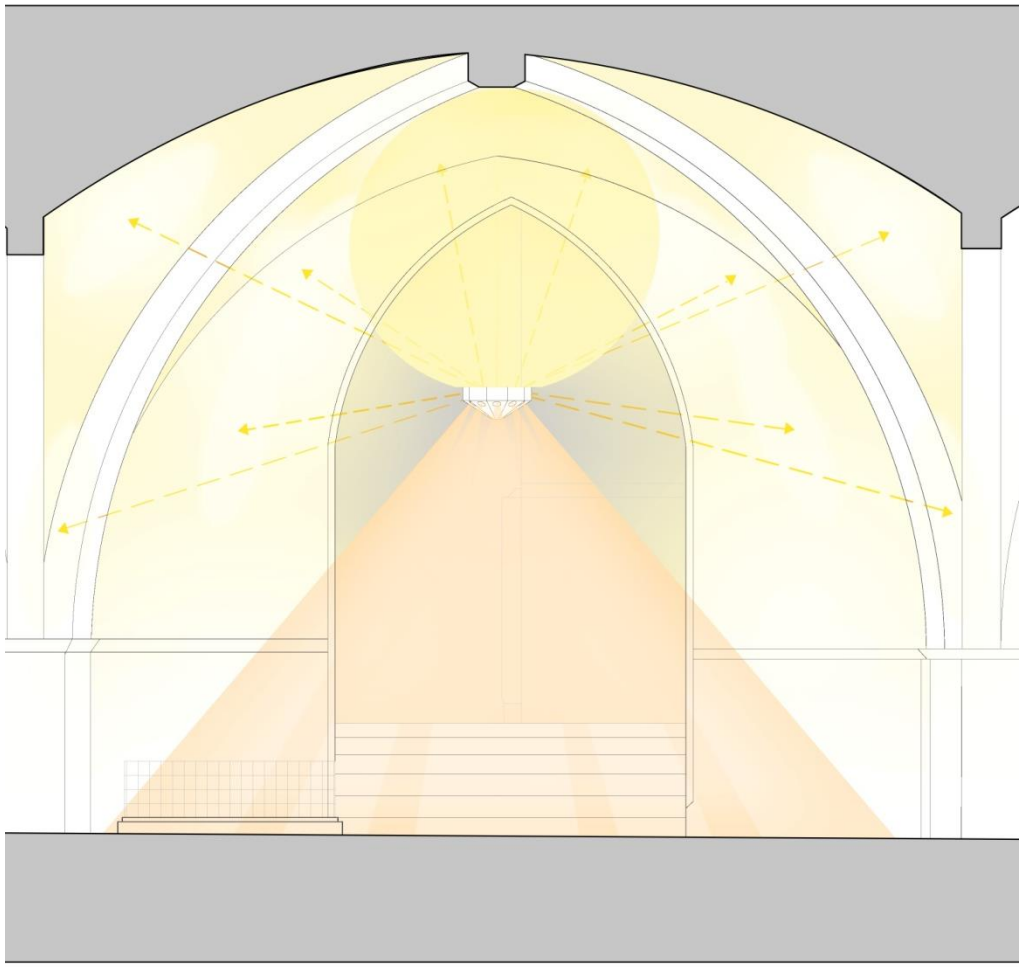

The new project involves the replacement of the old light fixtures with the following objectives:

- Best uniform illuminance for all surfaces.
- levels of illuminance on the faithful to facilitate reading activities.
- Low risk of glare.
- Better color rendering on the surfaces with predominance of blue pigments.

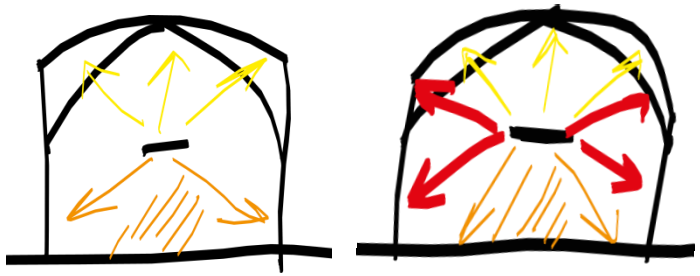

New lighting system: lighting fixtures placement

New lightning system: Chandelier type configuration

FLOOR LIGHTING

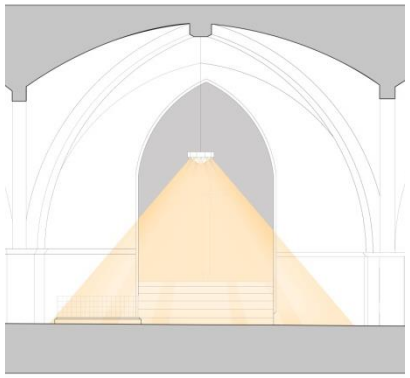

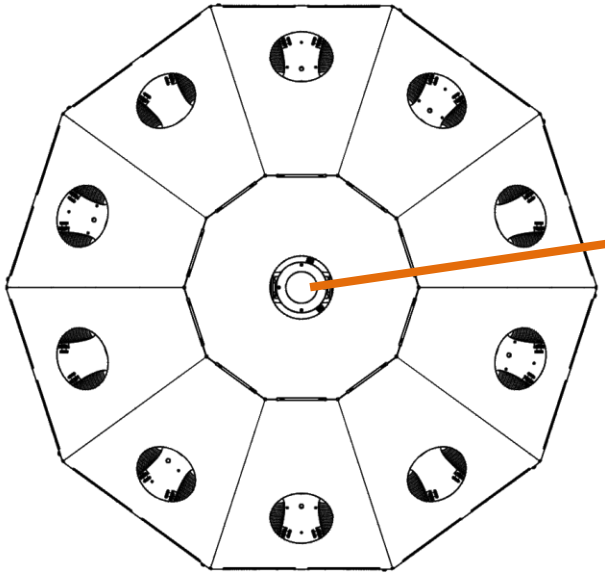

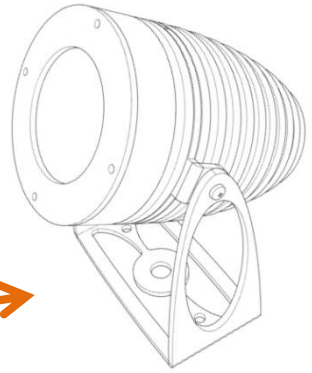

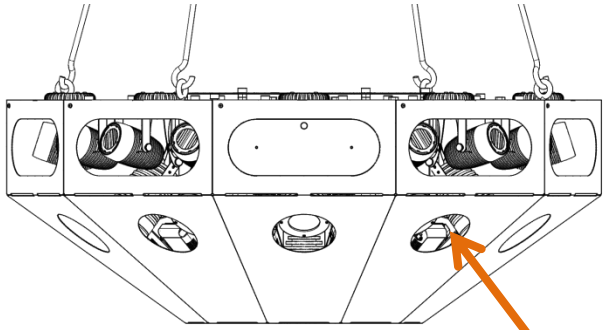

TITTI Bracket

\ Lighting

TITTI Bracket 16W

Beam 50°

CRI 97

Efficiency 75 lm/W

New lightning system: Chandelier type configuration

WALL LIGHTING

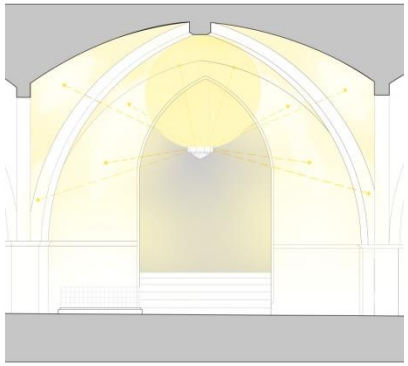

ROTONDA CC35

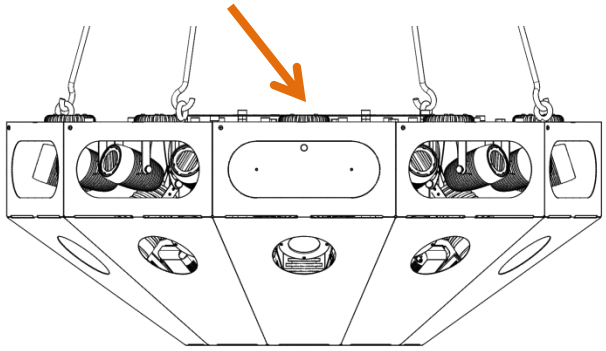

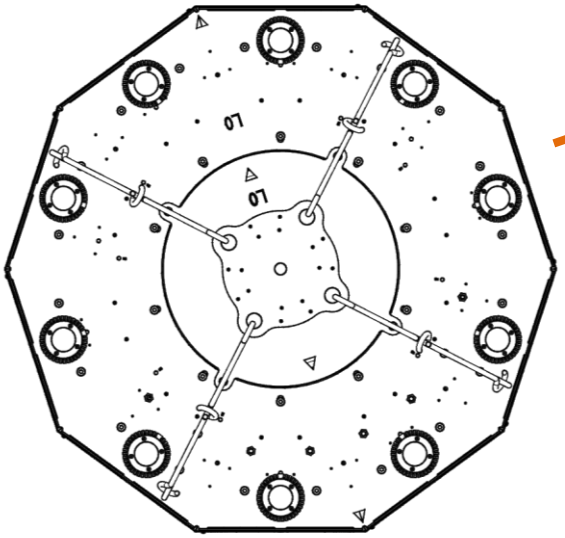

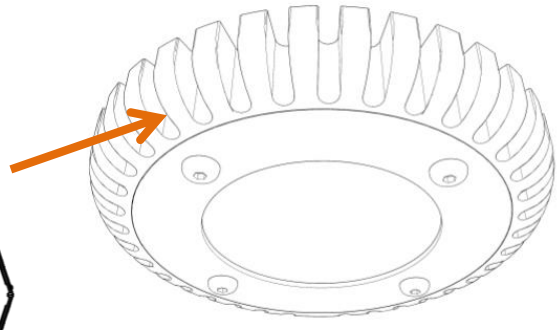

LED FIXTURE

ILM - Lighting ROTONDA

CC35

10W

Beam 120°

CRI 97

Efficiency 75 lm/W

New lightning system: Chandelier type configuration

VAULT LIGHTING

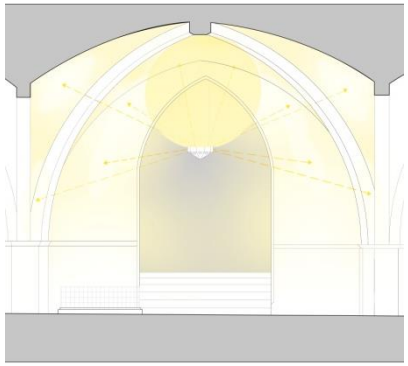

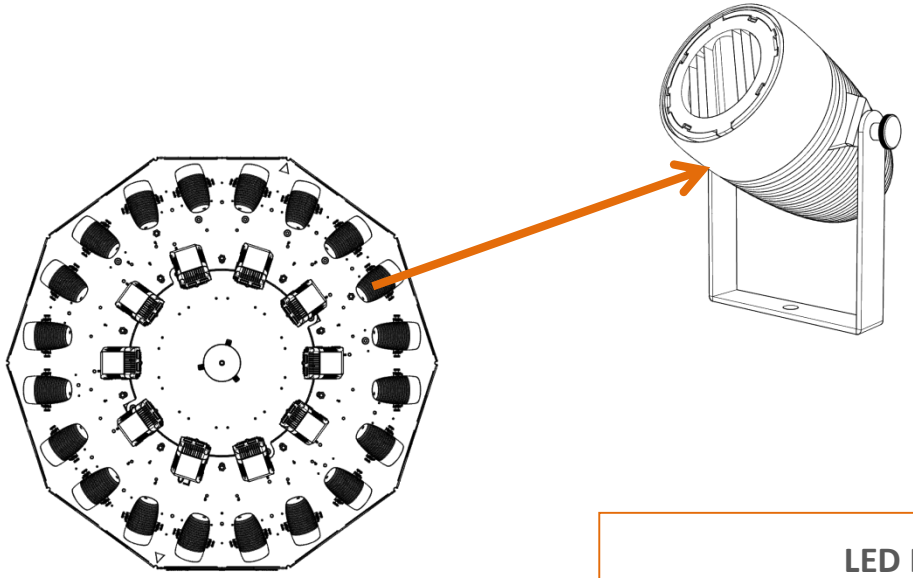

VESPA Bracket

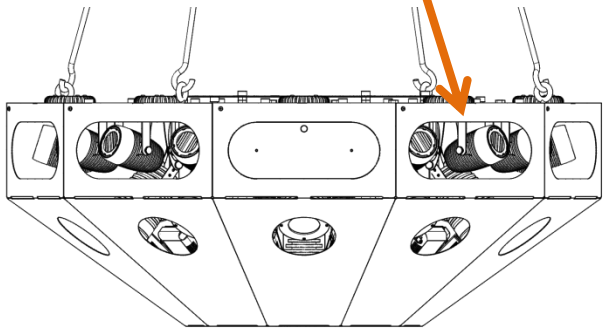

LED FIXTURE

ILM - Lighting

VESPA Bracket

10W

Elliptical beam

CRI 97

Efficiency75 lm/W

New lightning system: Chandelier type configuration

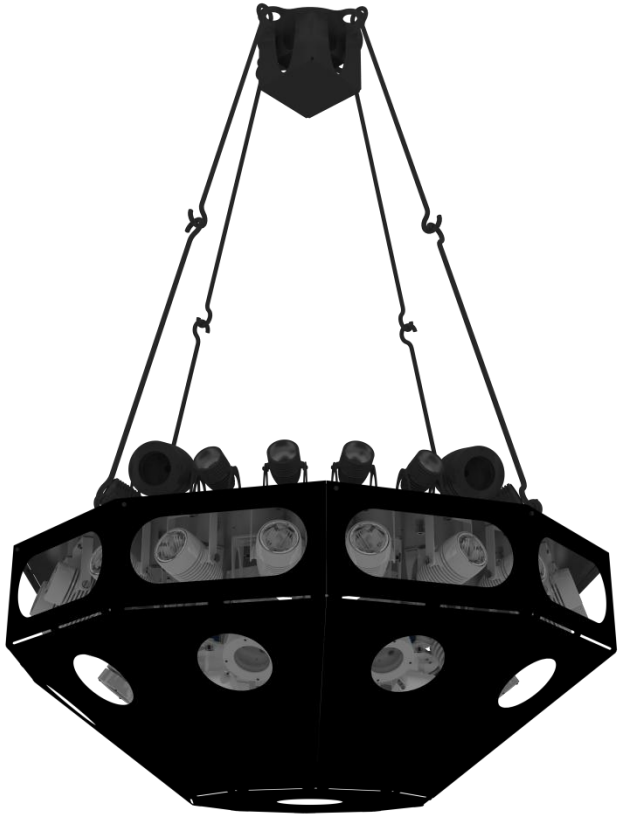

Equipment dedicated to :

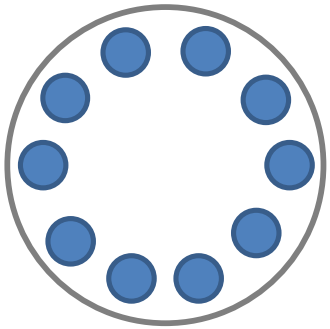

1. the lightning of the **FLOOR**

2. the lightning of the **CEILING**

3. the lightning of the WALL.

New lightning system: Elliptical Beam

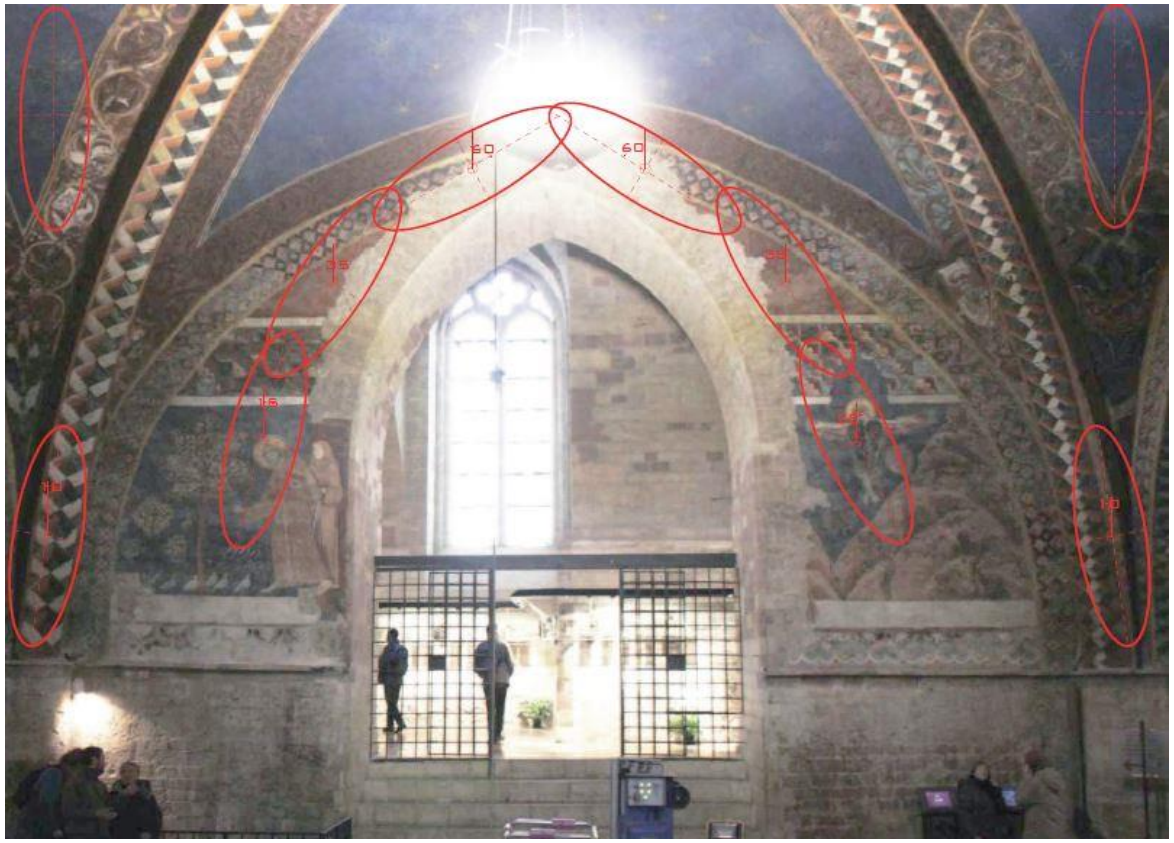

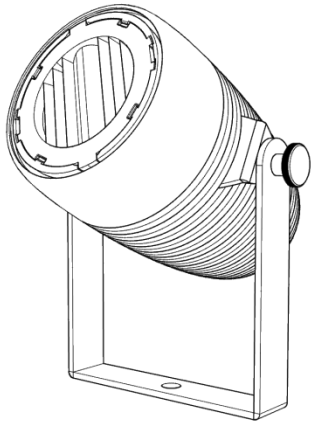

First lighting LED fixture in the world with ELLIPTICAL BEAM on C.O.B.

CUSTOM for the Lower Basilica

New lightning system: assembling phases.

New lightning system.

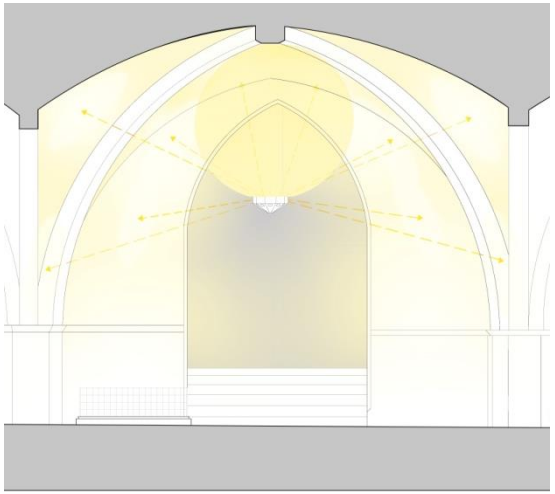

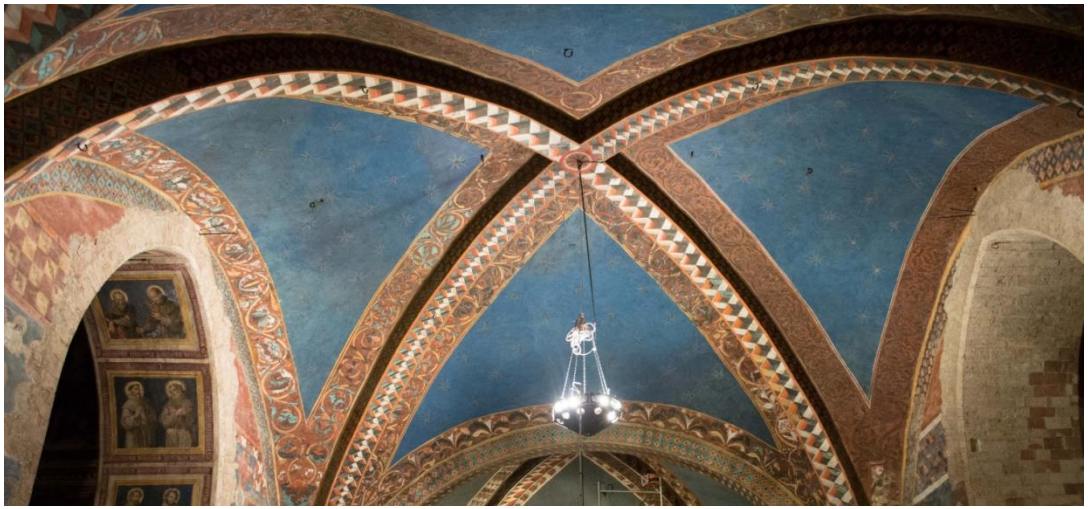

New lightning system.

CASA ITALIA

Rio 2016

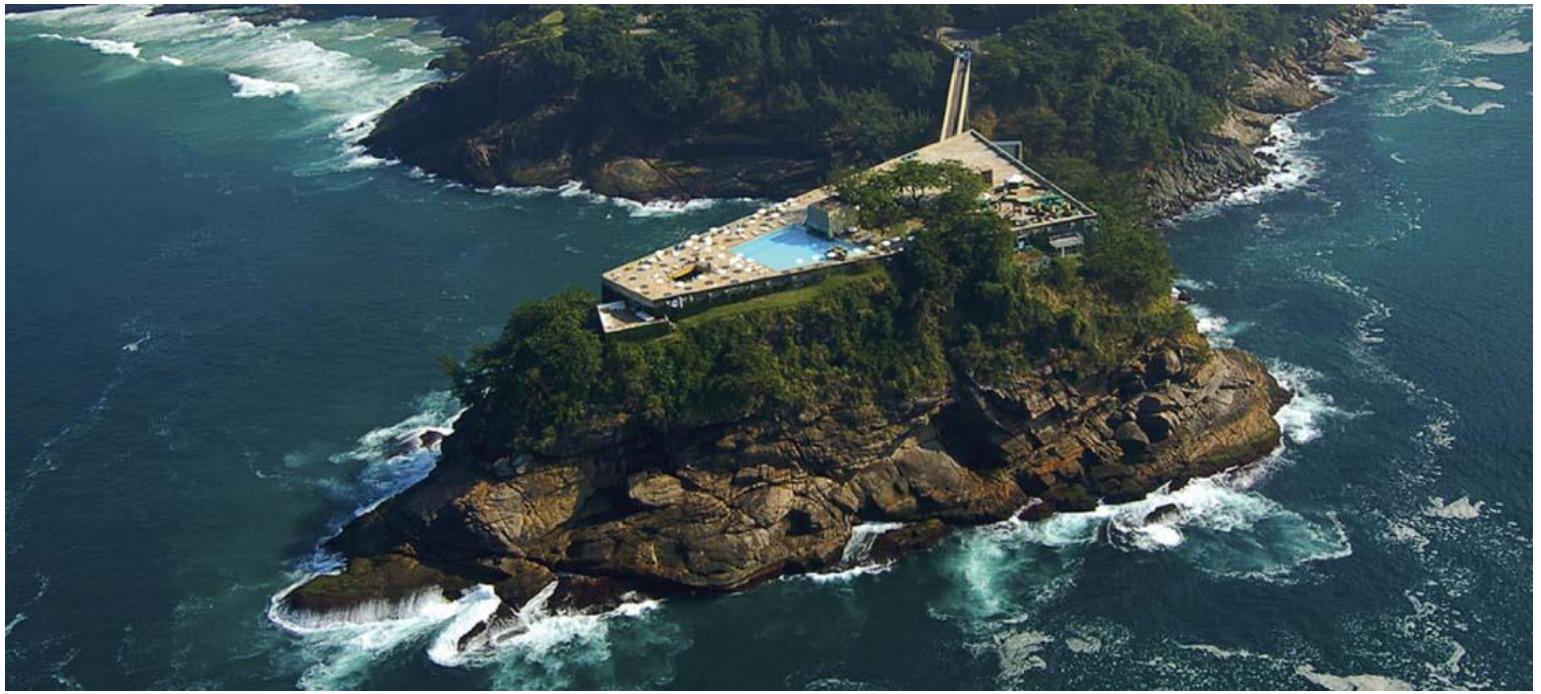

H O R I Z O N T A L

The historical **Costa Brava Clube**, in Rio de Janeiro, designed in the 60' s by renowned architect Ricardo Menescal, is set to host **Casa Italia**, the CONI and Italian Institutional Headquarters during the 2016 Rio Olympic Games.

Casa Italia is the result of far reaching project that aims to highlight Italian excellence through and through- from the world of sports to that of design; a showcase of the **craftsmanship** that lies behind the label **"Made in Italy".**

Beatrice Bertini's CONCEPT HORIZONTAL, is extended into an art and design project, with Bertini and Acciari responsible for developing the arts and Claudia Pignatale the interior design. The fusion and synergy of these talents, transform Casa Italia into a lighthouse, a ship, an island, that fine line defined as the horizon – that separates earth from sky – and leaps into the unknown.

ITALIA
OLYMPIC
TEAM
Rio2016

CASA ITALIA

LOUNGE - CIGAR BAR - RESTAURANT

Light for design

Lounge

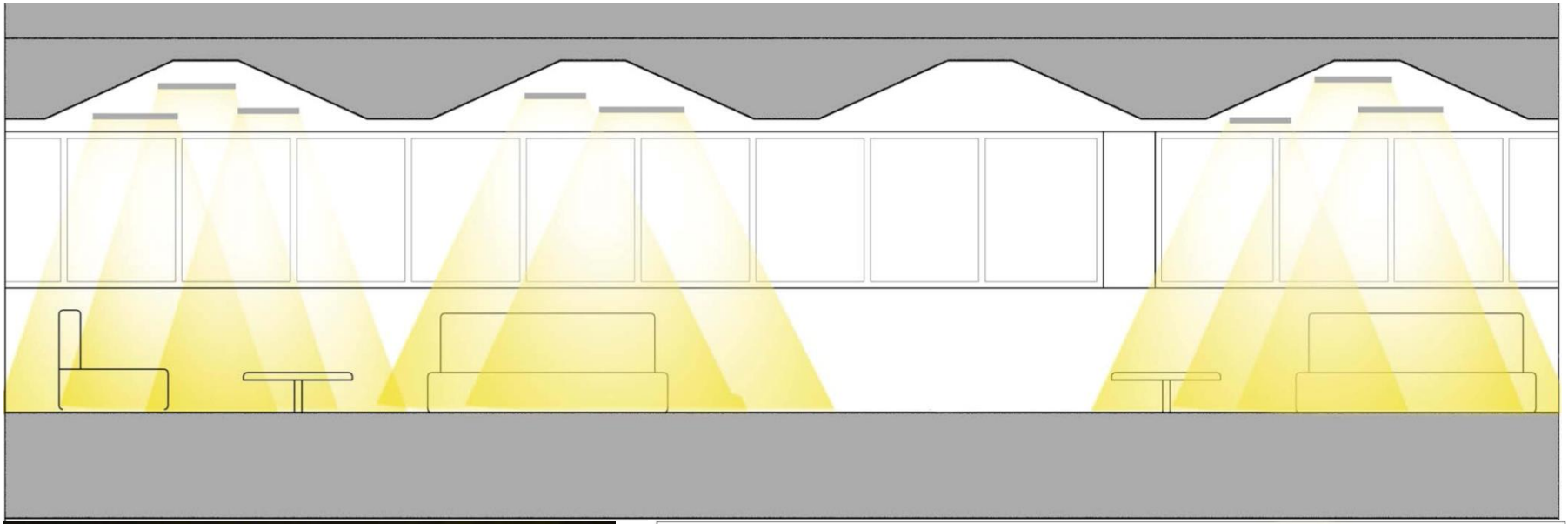

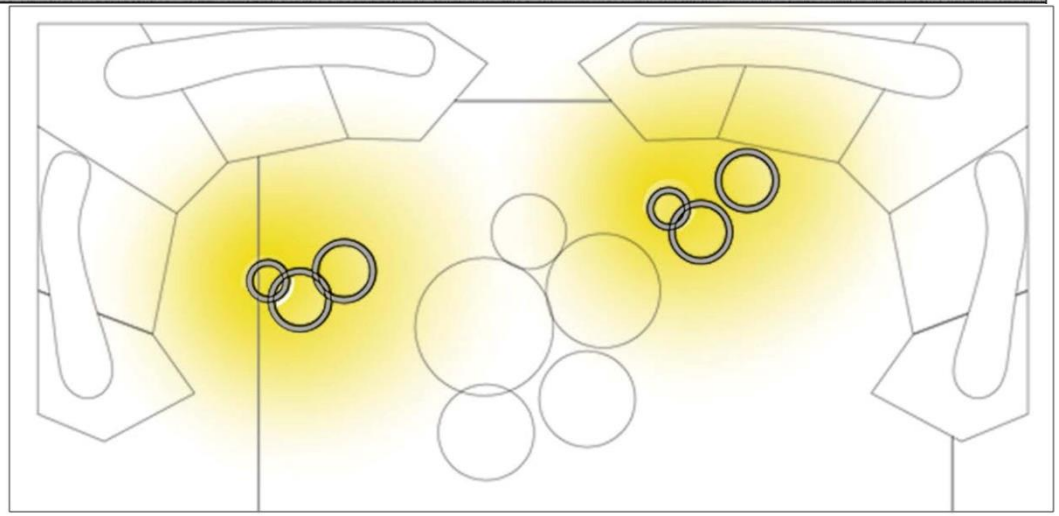

Light ring
Custom Furniture

Cigar Bar

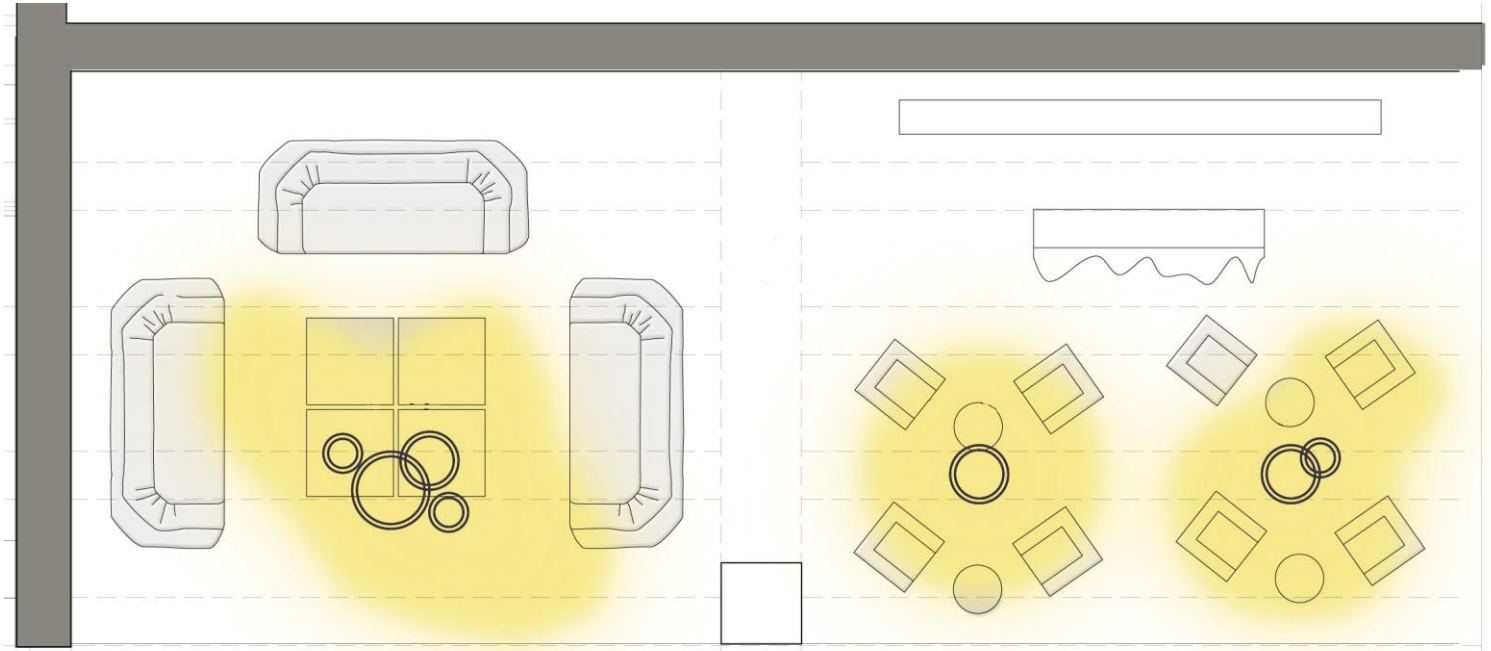

Light ring
Custom Furniture

Cigar Bar

Cigar Bar

Restaurant

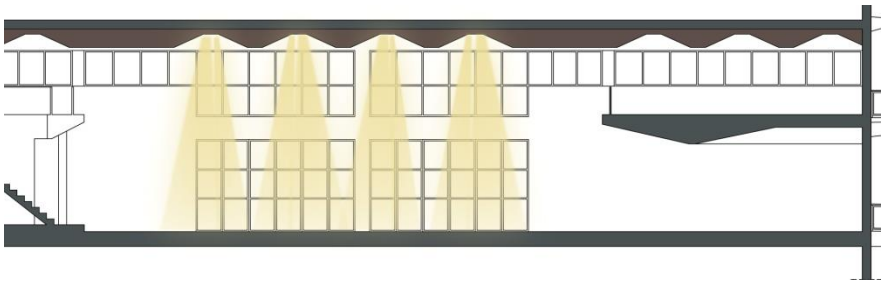

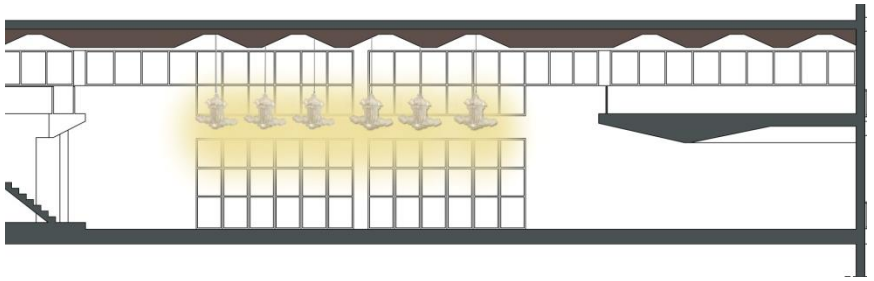

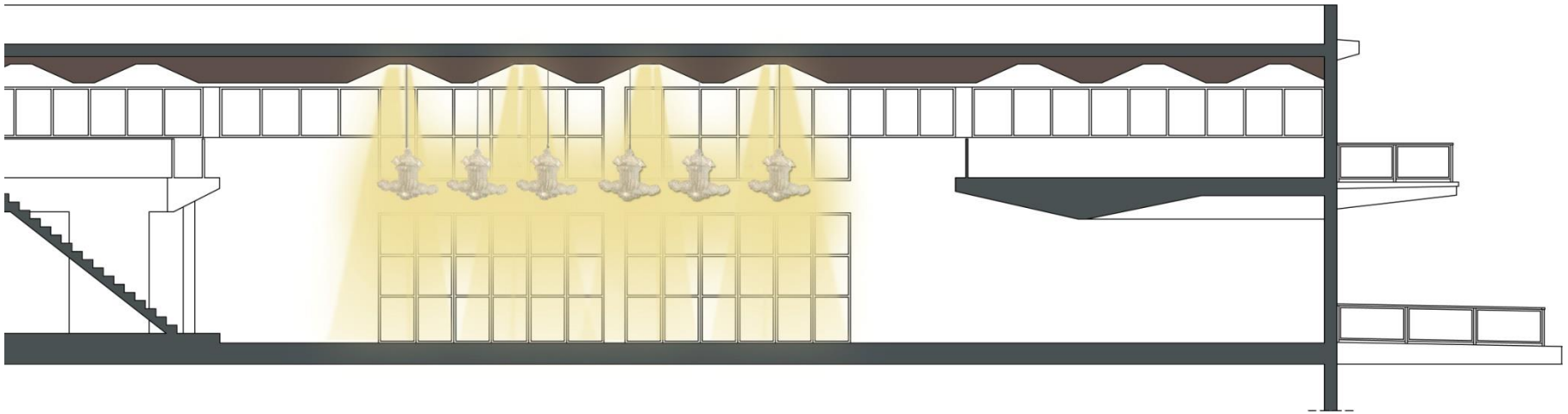

Restaurant

Restaurant

CASA ITALIA

ROOF TOP

Light for Landscape

Roof top of CASA ITALIA - Landscape

Roof top: Lighting fixtures placement

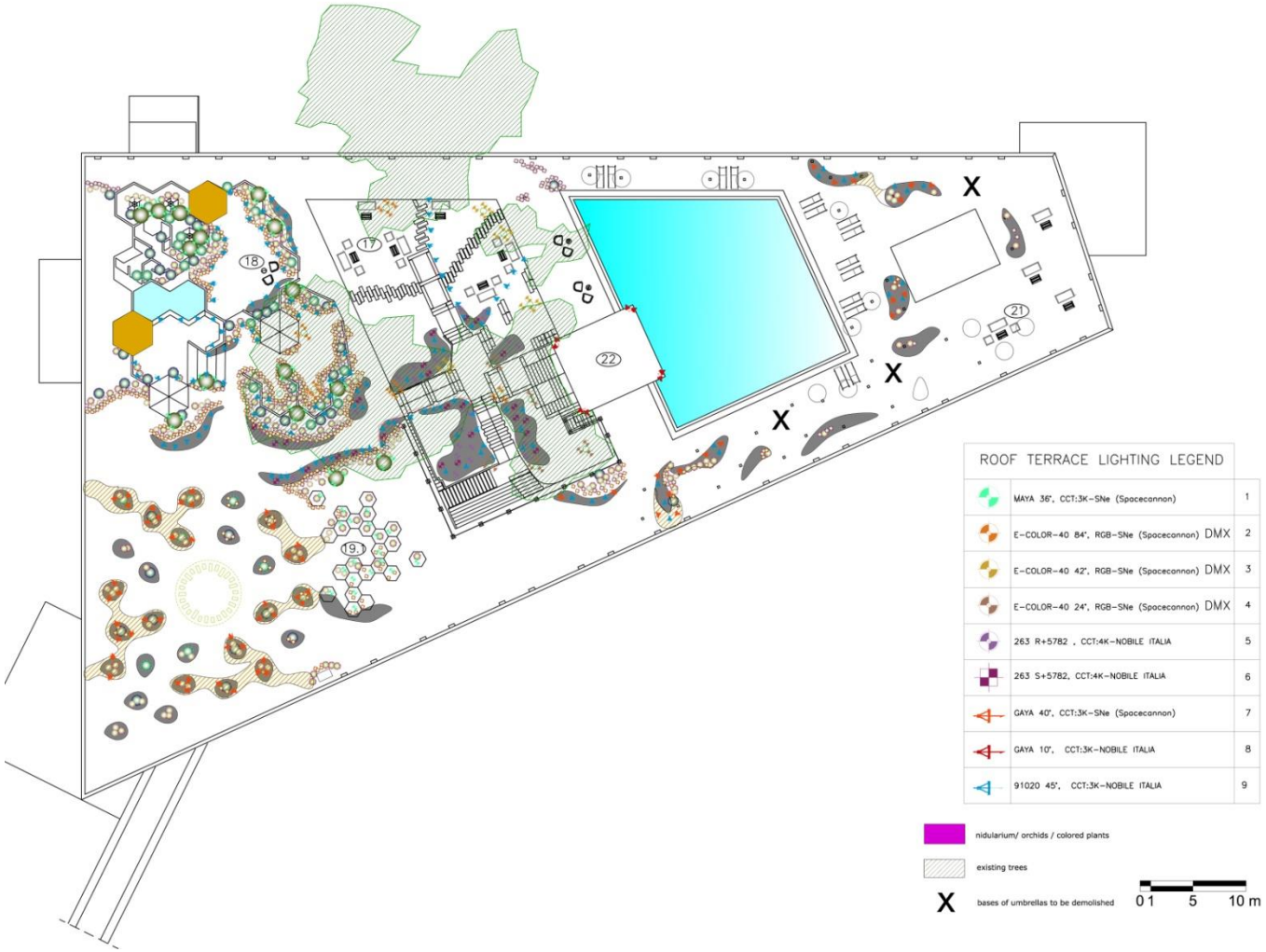

Roof top

Floor's light istallation

Detail of the floor's light istallation

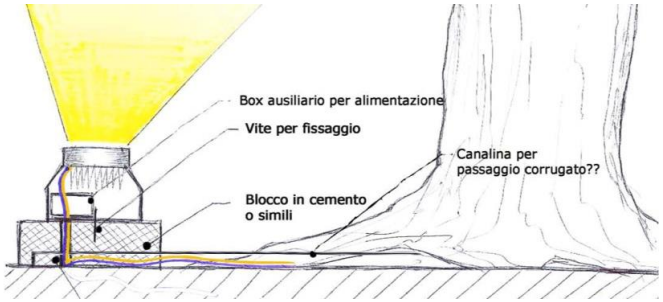

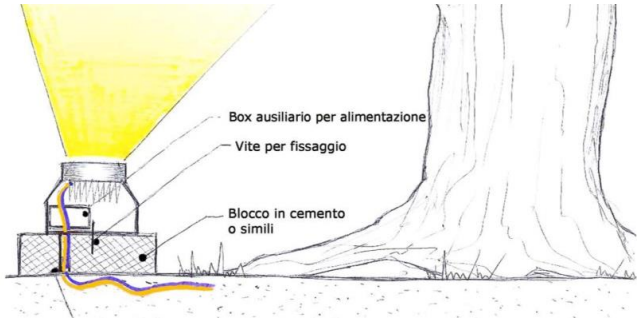

Detail of GAYA istallation: Nidularium Islands / orchids / colored plants

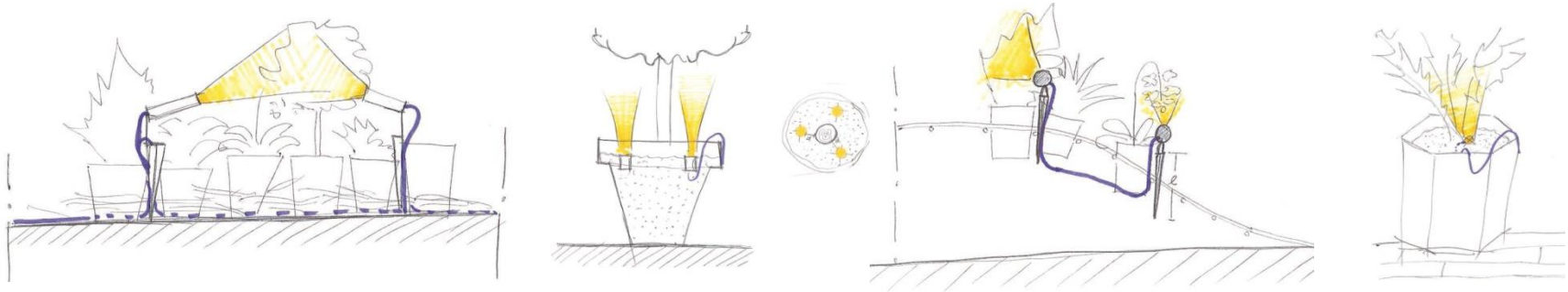

CASA ITALIA

SHOW COOKING

Light for Architecture

Show Cooking: Light for Architecture

Show Cooking: Light for Architecture

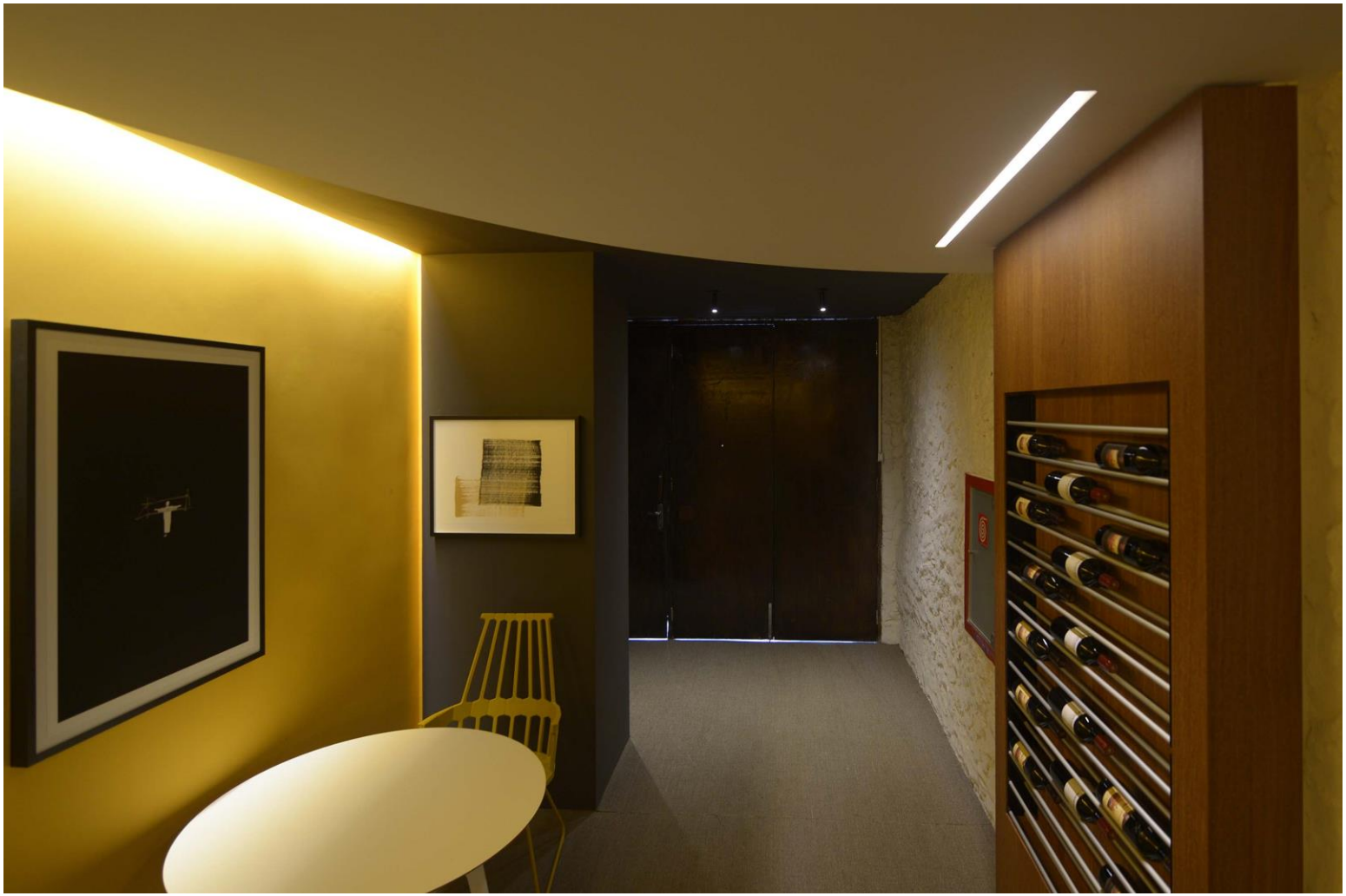

CASA ITALIA

HORIZ-ONTAL

Light inside Art

Horiz - ontal: Light inside Art

OBJECTIVE: underline two different and fundamental elements of the art work; the HORIZONTAL and the SPECULAR aspects relative to oblique plain.

Horiz - ontal: Lighting concept

Oblique lighting on the ceiling

Oblique lighting on the floor

STRIP LED

Color Temperature

2 700 k

Arranged with the artist

CASA ITALIA

EBONY FURNITURE

Light inside Handcraft

Bar with ebony furnitures MADE IN ITALY by Stefano Marolla

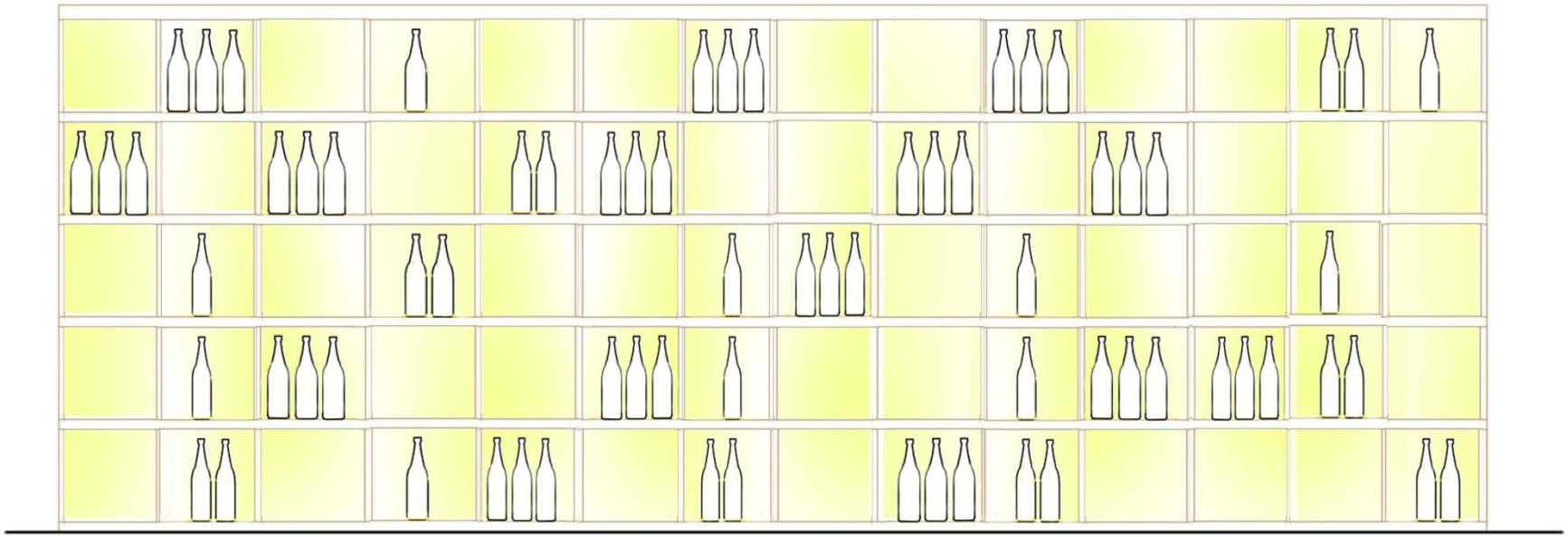

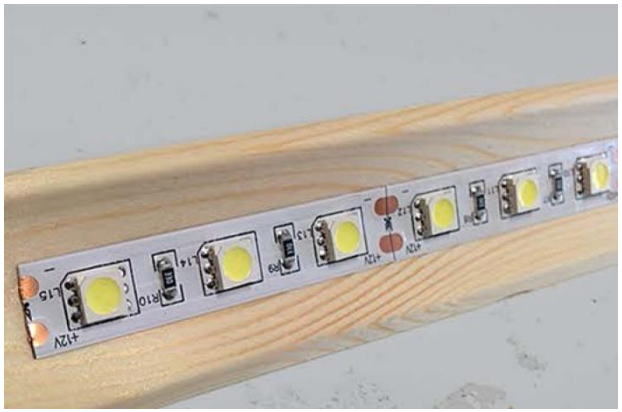

STRIP LED

2700 K

OBJECTIVE: optimize the view and the reading of the bottles and their labels minimizing the glare.